Solid Edge 2D Drafting

Robust 2D design application – at no cost

fact sheet

Siemens PLM Software

www.siemens.com/solidedge

Summary

Solid Edge® 2D Drafting software delivers a production-proven set of capabilities for creating 2D documentation. This free application is available for download anywhere in the world. Solid Edge 2D Drafting offers excellent drawing layout, diagramming, annotation and dimensioning controls that automatically comply with a wide range of drafting standards – including ISO,ANSI, BSI, DIN, JIS and UNI. Visit www.solidedge.com/free2d to download your free software and learn more.

Benefits

- Save time and money with a cost effective, high value solution for 2D tasks
- Continue to make use of 2D legacy data
- Stop paying for upgrades and subscriptions
- Download regular updates for free
- Standardize on a single platform, reducing training and maintenance costs
- Share native drawings with suppliers for design review or manufacture

Features

- Production proven 2D drafting
- Fast and easy parametric drawing layout
- Annotation and dimensioning that complies to world standards
- Diagramming for electrical and other schematics
- Translation wizards fromAutoCAD and other 2D products
- WYSIWYG for AutoCAD 2D drawings
- Free to download and use

Streamlined drawing creation

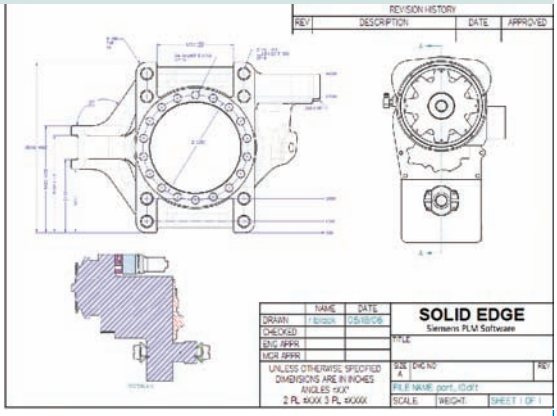

Solid Edge 2D Drafting demonstrates Siemens PLM Software's commitment to helping companies control costs.Whether you are using 2D company wide or for specific 2D design processes, you will benefit from Solid Edge 2D Drafting. Solid Edge 2D Drafting capitalizes on 10 years of production-proven capabilities developed for Solid Edge.

The innovative Microsoft Office 2007 style user interface includes a verticalized SmartStep that walks you through each command step, while providing quick access to all inputs so you are up and running faster and more productive when you become familiar with Solid Edge. Another helper is the new Ribbon that lists the most common operations on a "Home" tab for fast access to other commands. Intelligent 2D Parametric relationships can be applied to geometry as it is created or added later in the process. Relationships ensure the design intent is maintained. Keeping line ends connected, maintaining tangencies, keeping lines parallel or perpendicular to each other and defining formula-driven dimensions (Dim1 = Dim2+50) are just a few of the intelligent relationships you can apply to geometry. Relationships are maintained across multiple views so that changing a diameter in a top view will automatically change the associated lines in adjacent orthographic views.

Solid Edge 2D Drafting includes comprehensive dimensioning and annotating tools that enable you to quickly create fully detailed drawings in seconds. With Solid Edge, you have full control over every element of your drawings, ensuring the requirements of organizational and international standards are met. Intuitive 'grid' tools allow you to quickly sketch your designs with precision using a full suite of drawing tools that enable you to create all the geometric elements you require, including circles, arcs and curves in any style or color you choose.

Preserve and maintain your existing drawings

In Solid Edge 2D Drafting, you can continue to make full use of your existing 2D legacy data. Intuitive wizards provide robust translation of existing 2D files such as AutoCAD, while 2D drafting

tools not only emulate the workflows you already know but offer additional capabilities as well. Solid Edge also provides a familiar process for generating detailed drawings from 2D layouts. Similar in concept to the model and paper space methodology in other 2D products, 2D layouts are designed at 1:1 scale.

Multiple detail views of the layout are then created on separate drawing sheets. Each view can be scaled as required, while still maintaining correct dimensions and annotations. Any changes to the original 2D layout are automatically reflected in the detail views. These and many other customer-driven capabilities make Solid Edge 2D Drafting a compelling application for AutoCAD 2D users looking for more value and productivity from their 2D CAD seats.

Diagramming

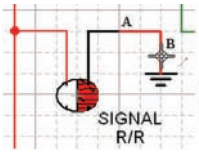

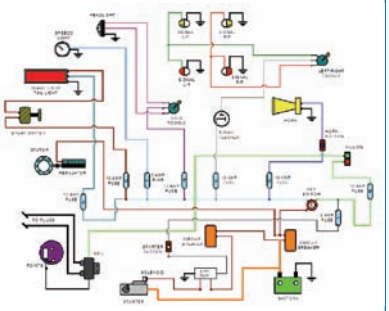

Solid Edge 2D Drafting features 'drag and drop' diagramming capabilities using industrystandard symbols (blocks) to automate the creation of 2D diagrams, such as those commonly produced for electrical and P&ID layouts – without the need for dedicated schematic software. Blocks can support multiple occurrences of the same component and can represent alternate positions to ensure a correct bill of materials. Solid Edge 2D Drafting delivers extensive built-in libraries – you can use your existing block libraries without translation.

Higher productivity, lower costs

Solid Edge 2D Drafting allows Solid Edge customers to standardize on a single platform, reducing costs for maintaining and training on multiple CAD systems and avoiding an additional learning curve. When you share native Solid Edge drawings with your suppliers, for design review or manufacturing, you avoid translation requirements while ensuring data integrity. You can also subscribe to Solid Edge's award winning support program to gain access to the API for Solid Edge 2D Drafting at a nominal cost.

The first step to PLM

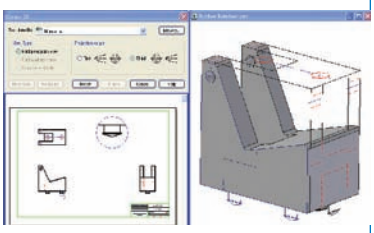

Solid Edge 2D Drafting supports Siemens' proven Evolve to 3D program designed to help you move to the productive world of 3D at your own pace. Transitioning to 3D and PLM does not have to be expensive or complicated. Solid Edge 2D Drafting eases evolution costs and simplify the migration process by allowing you to get your job done today, while implementing the new system. Evolve from 2D to 3D design using a simple, low risk, 4-step approach, on your way to the competitive benefits of PLM.

For more information, contact your local Velocity Series™ portfolio representative:

Contact

Siemens PLM Software – www.siemens.com/solidedge

Americas 800 807 2200
Europe 44 (0) 1202 243455
Asia-Pacific 852 2230 3308

SIEMENS

© 2010 Siemens Product Lifecycle Management Software Inc. All rights reserved. Siemens and the Siemens logo are registered trademarks of Siemens AG. D-Cubed, Femap, Geolus, GO PLM, I-deas, Insight, Jack, JT, NX, Parasolid, Solid Edge, Teamcenter, Tecnomatix and Velocity Series are trademarks or registered trademarks of Siemens Product Lifecycle Management Software Inc. or its subsidiaries in the United States and in other countries. All other logos, trademarks, registered trademarks or service marks used herein are the property of their respective holders. W11 8799 3/10 C